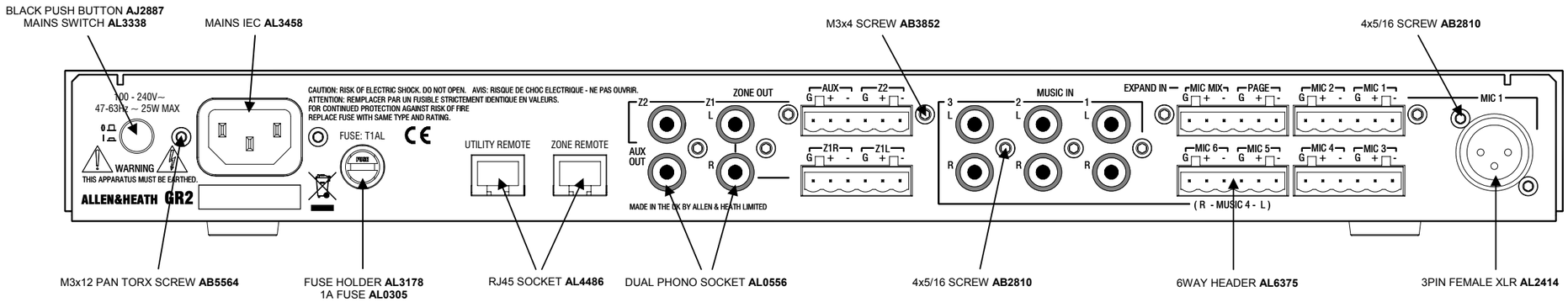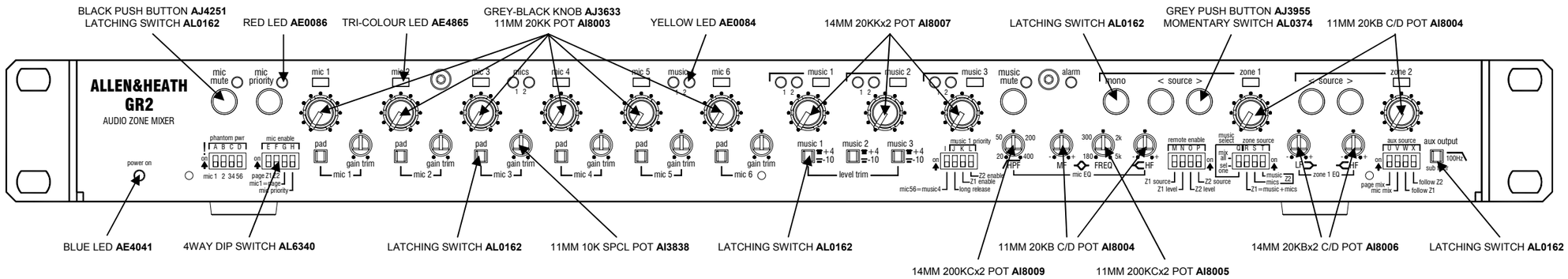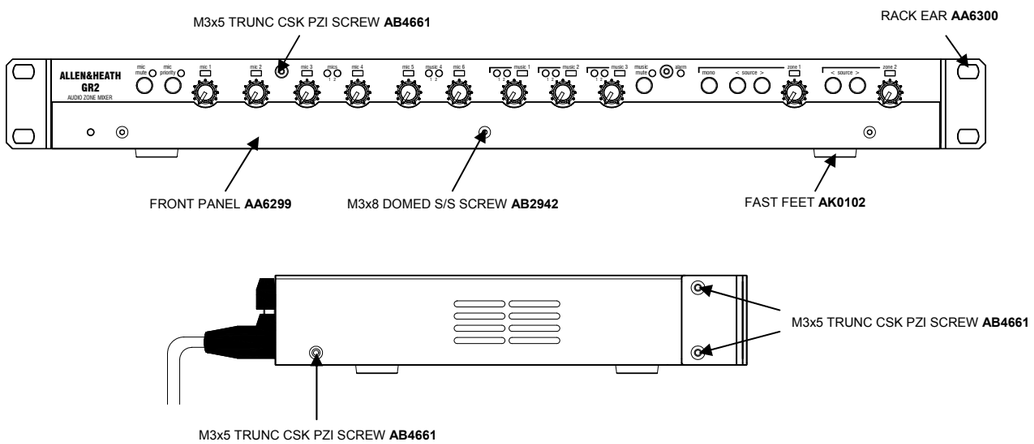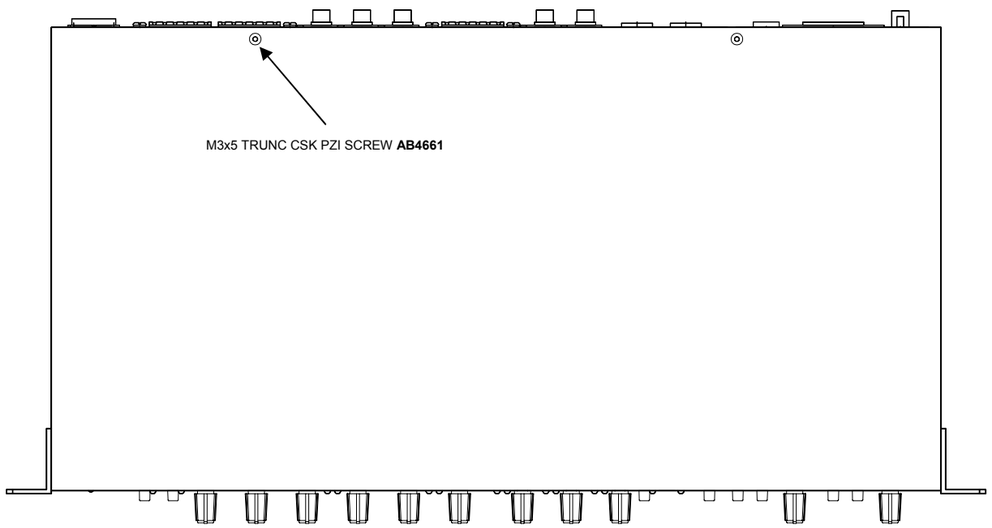GR2 Surface Parts